LafayetteConnector

Acadiana's Path Forward

A DOTD CONSTRUCTION PROGRAM

CONNECTIVITY AND STRUCTURES BREAKOUT SESSION

COMMUNITY VISION AND VALUES WORKSHOP

PROGRESSIVE COMMUNITY OUTREACH CENTER ● JANUARY 23, 2016

State Project Number: H.004273.5

Federal Aid Project Number: H004273

URBAN BRIDGES & CONTEXT SENSITIVE SOLUTIONS

1. I-49 Lafayette Connector Bridges
2. FEIS/ROD Commitments
   - Urban Viaducts (i.e. long bridges)
   - Urban Signature Bridges (e.g., arches, cable supported)
3. I-49 Lafayette Connector Bridges
   - Aesthetic Enhancements (e.g., texturing, shapes, color, etc.)
   - CSS Opportunities
   - Under Bridge Enhancement Opportunities

I-49 LAFAYETTE CONNECTOR BRIDGES

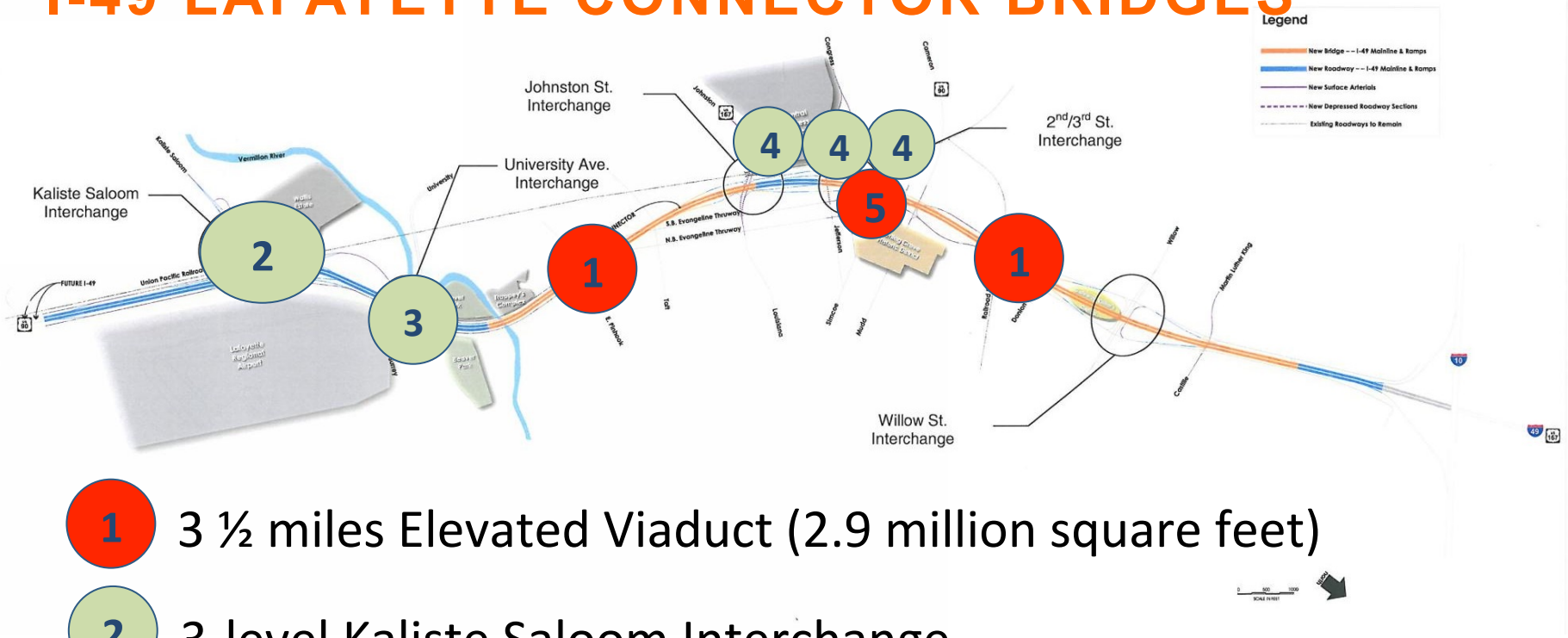

1. 3 ½ miles Elevated Viaduct (2.9 million square feet)
2. 3-level Kaliste Saloom Interchange
3. University Avenue Overpass
4. Railroad Bridges
5. Signature Bridge

I-49 LAFAYETTE CONNECTOR FEIS/ROD MAINLINE BRIDGES

2003 FEIS/ROD and 2006 CSS Design Considerations:

- Longer Span Lengths: minimum 150-ft
- Shallower Structure Depth: maximum 8-ft
- Higher Vertical Clearance: minimum 22-ft
- Aesthetic Bridge Shape (mainline): box girders
- Signature Bridge at 2nd/3rd Street (Central Business District)

WHAT DO LONGER SPANS & HIGHER VERTICAL CLEARANCE MEAN?

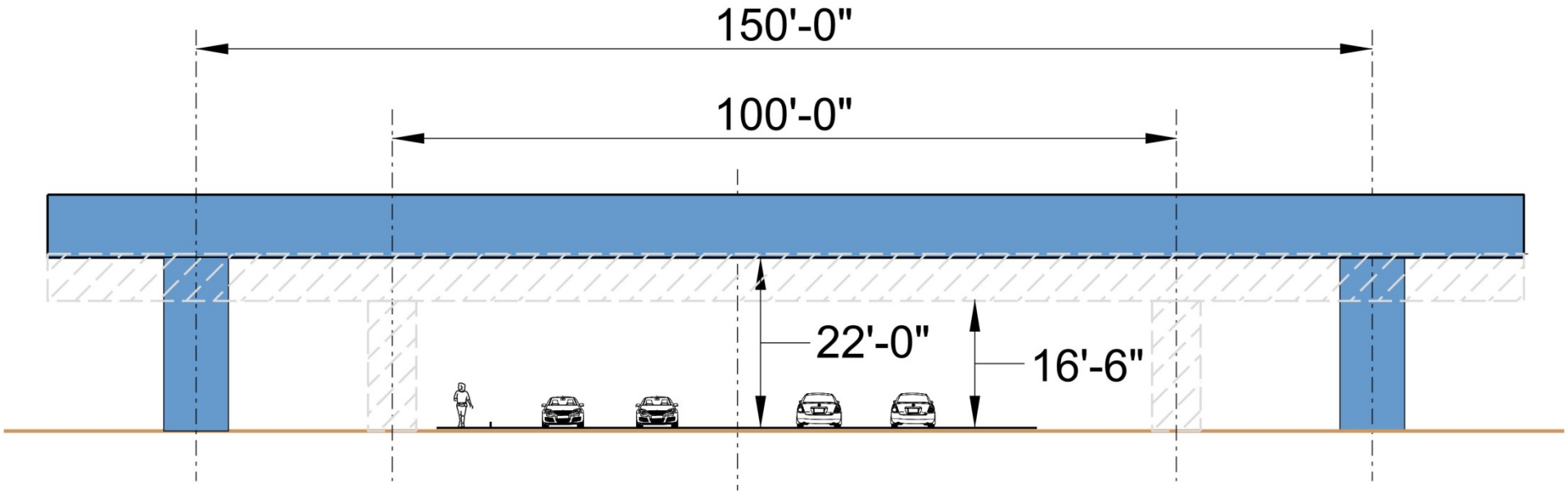

BOX GIRDER BRIDGES OFFER BETTER AESTHETICS AND DAMPEN NOISE

AS OPPOSED TO I-GIRDER BRIDGES

I-49 LAFAYETTE CONNECTOR FEIS/ROD MAINLINE BRIDGES

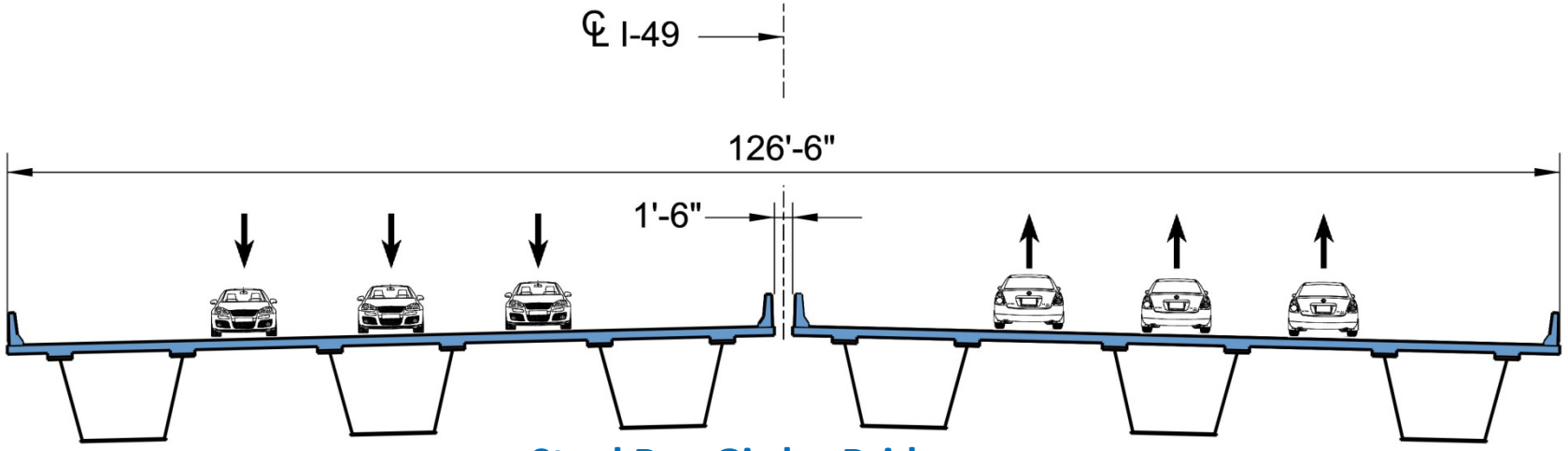

Steel Box Girder Bridge

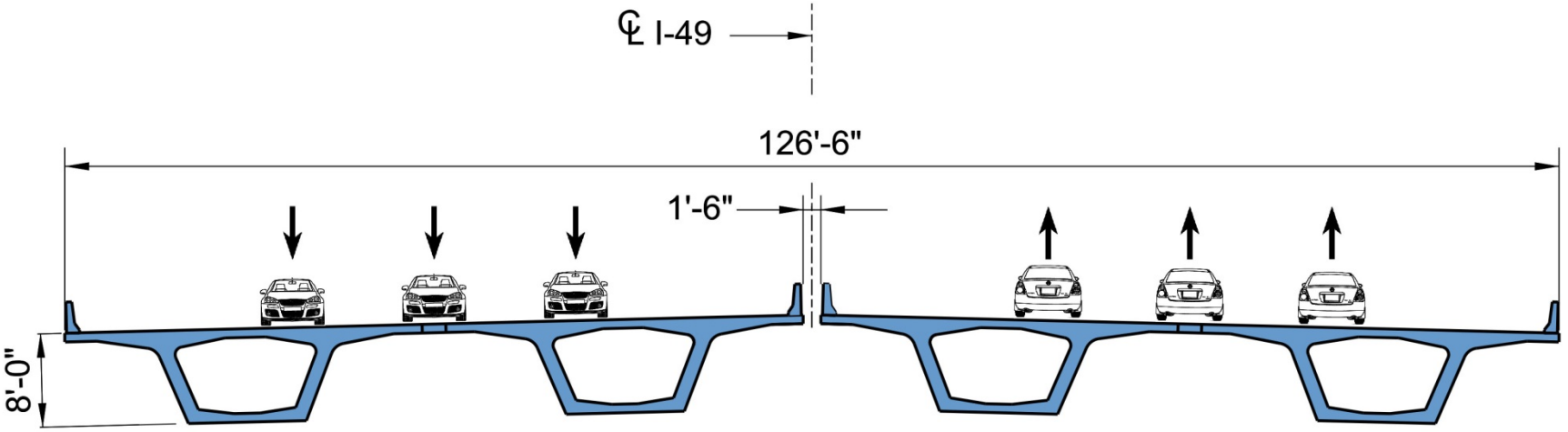

Precast Concrete Segmental Box Girder Bridge

EXAMPLES OF URBAN VIADUCTS USING BOX GIRDERS (WITH GROUND FEATURES YET TO BE IMPLEMENTED)

US 183, Austin, TX (135-Ft Spans; 7-Ft Gap; 24-Ft Vertical Clearance)

WHAT ARE URBAN SIGNATURE BRIDGES?

Shoemaker Bridge over LA River, Long Beach, CA

WHAT ARE URBAN SIGNATURE BRIDGES?

George Washington Carver Bridge, Des Moines, IA (279-ft span)

I-49 LAFAYETTE CONNECTOR FEIS/ROD PROCESS SIGNATURE BRIDGE CONCEPTS

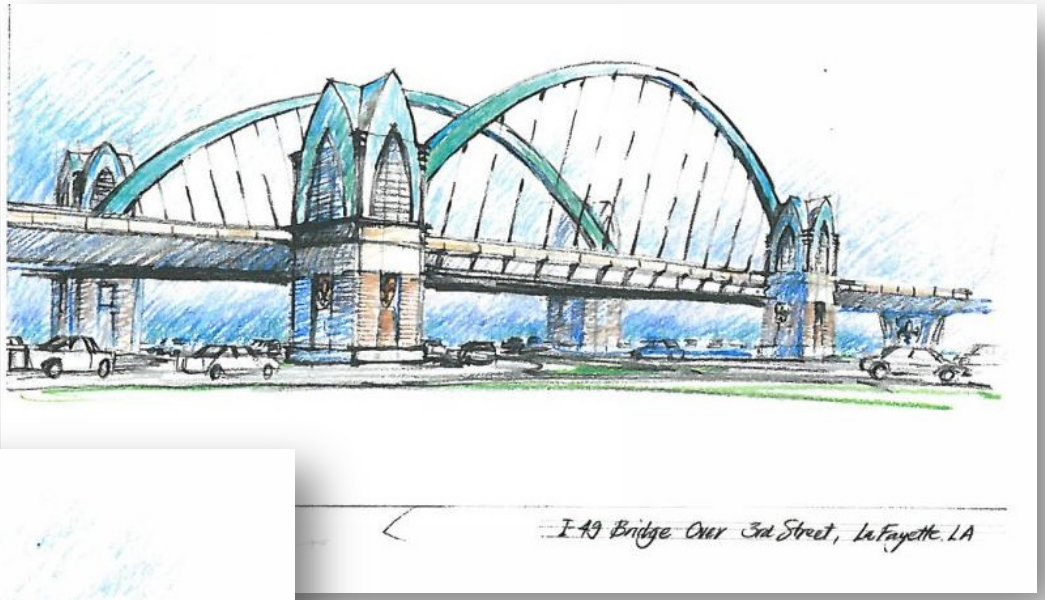

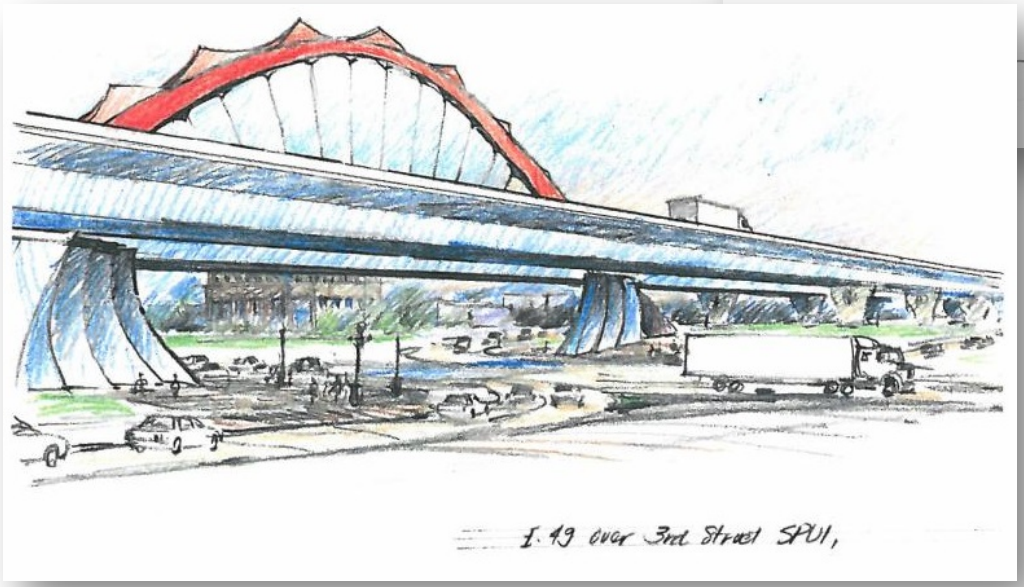

EXAMPLES OF SIGNATURE URBAN CABLE STAYED BRIDGES

6th Street North Viaduct, Milwaukee, WI (195-ft span, Approximately 60-65 ft deck width)

EXAMPLES OF SIGNATURE URBAN CABLE STAYED BRIDGES

East Fork over White River Bridge, Columbus, IN
472-ft long cable stay (232'-232')

William Darden Bridge, Dublin, Ireland
609-ft long cable stay (148'-356'-59'-46')

IH-35 Bridges, Waco, TX
185'-250'-`185' long cable stay

EXAMPLES OF SIGNATURE URBAN ARCH BRIDGES

Lusail Expressway Artscape, Doha, Qatar

Arapaho Road Bridge, Addison, TX (170')

2nd Street Bridge, Austin, TX (160')

Columbus Gateway Bridge, OH (295')

AESTHETIC ENHANCEMENTS

Architectural Lighting

Architectural Shapes

Color and Texture

AESTHETIC ENHANCEMENTS

Theme Features

SIGNATURE BRIDGE: POTENTIAL RICH SOURCES OF INSPIRATION

Crawfish

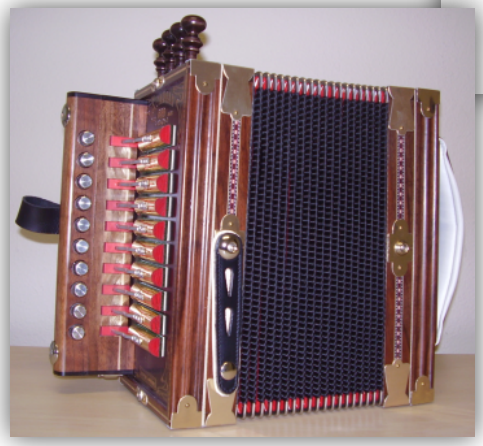

Cajun Accordion

I-49 LAFAYETTE CONNECTOR BRIDGE CONCEPT: CSS OPPORTUNITIES

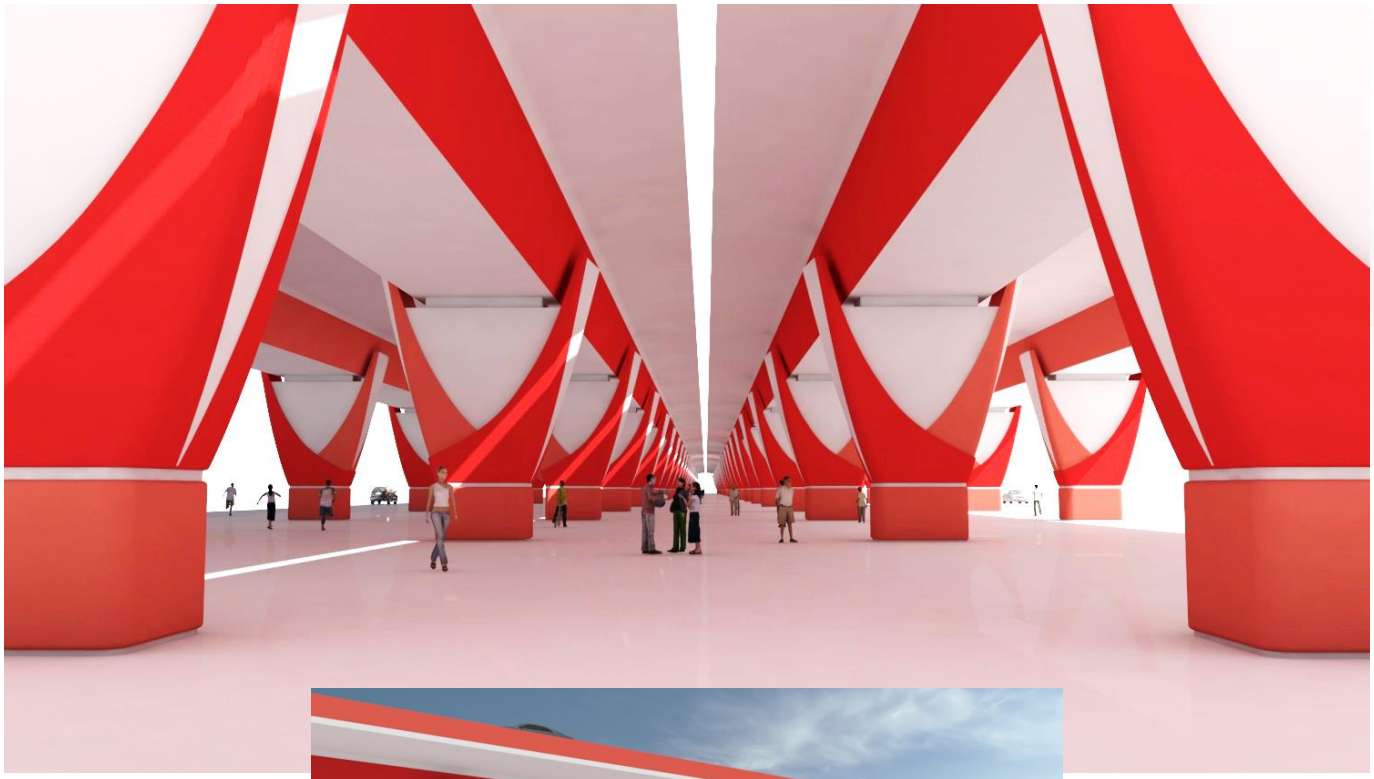

Crawfish Reference

I-49 LAFAYETTE CONNECTOR BRIDGES: CSS OPPORTUNITIES

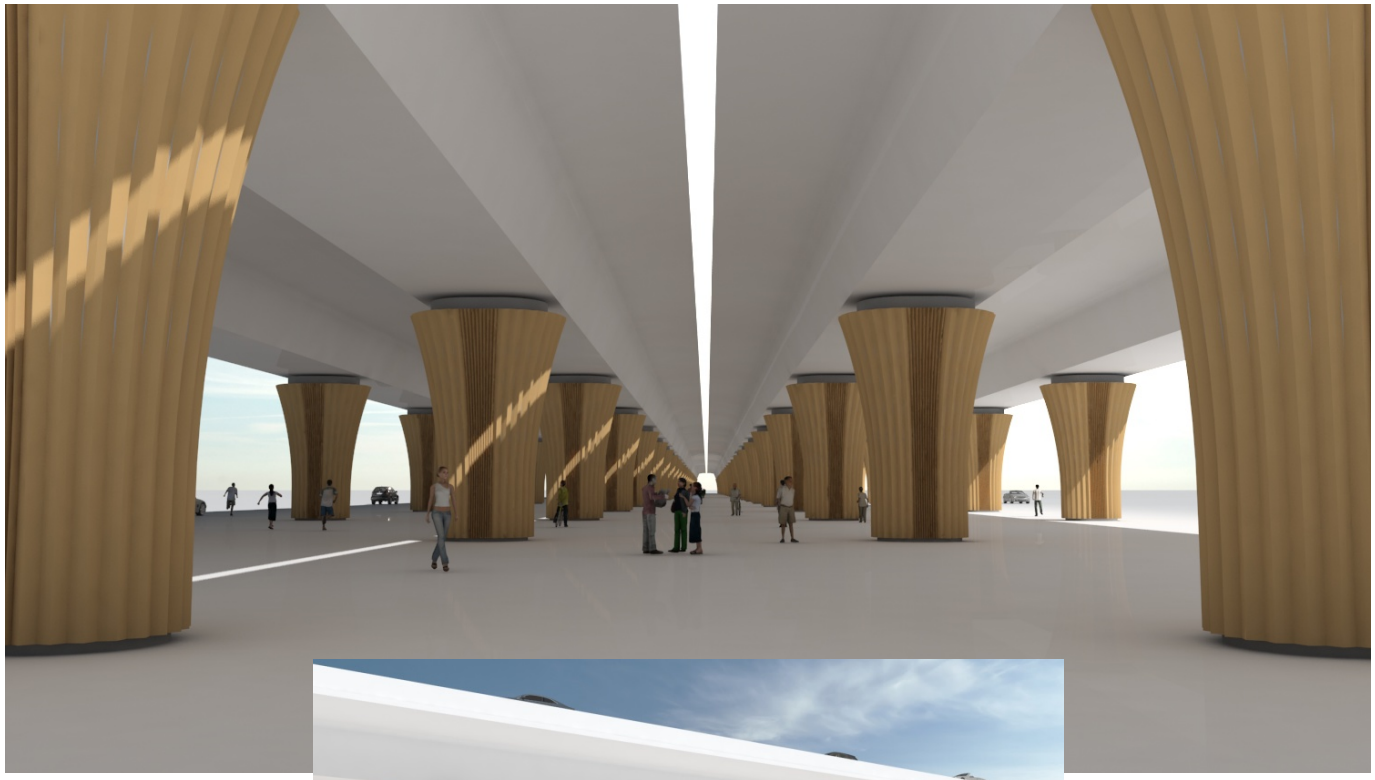

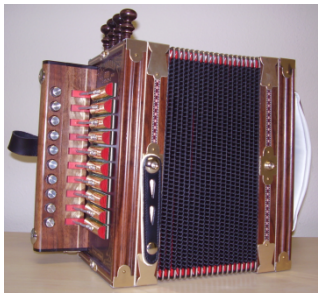

Cajun Accordion Reference

UNDER BRIDGE ENHANCEMENT OPPORTUNITIES

Parks, Plazas, Pedestrian and Bicycle Amenities

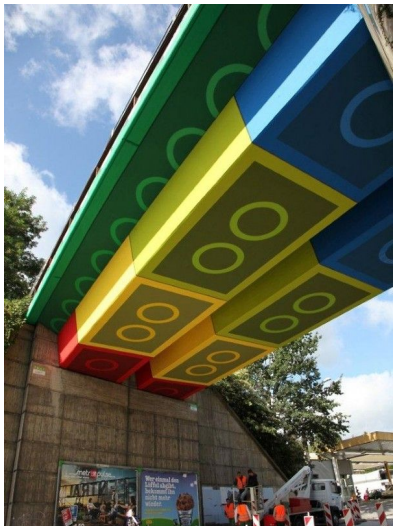

UNDER BRIDGE ENHANCEMENT OPPORTUNITIES

Landscaping and Trails

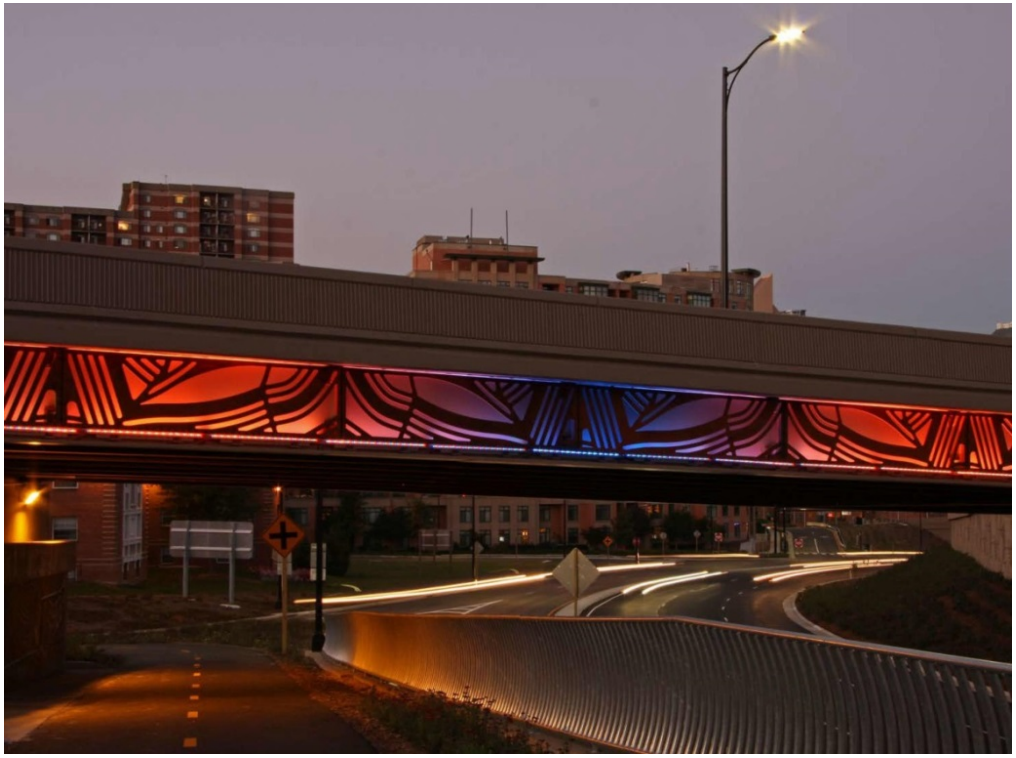

Underdeck & Architectural Lighting

49
LafayetteConnector
Acadiana's Path Forward
A DOTD CONSTRUCTION PROGRAM

THANK YOU